Jegatron Electronics

BBB, Bestest Button Brick - Design Description

1 Background

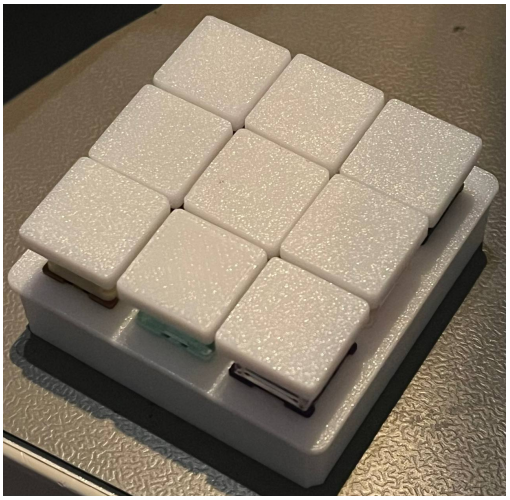

Figure 1: First iteration of BBB

The BBB is a multipurpose user programmable input device and also serves as an exercise product to hone my skills and try out different circuit solutions. Not all features and component make sense from a real product perspective, but serves as a learning experience.

It all started with the desire to have a more professional feel to my hobby and learning projects. So instead of using the classical tactile buttons forced down into a breadboard entangled in jumper wires, I bought some random mechanical keyboard switches and 3d-printed an enclosure for them. Then came the time to make the circuit board to empower this.

Feature creep. That is the spirit of this project. Because of personal projects I need the BBB need to be Zigbee enabled and preferably also wifi capable. Since I had already used the ESP32-C6 for such purposes I decided to use this.

2 Features

- Nine user programmable buttons
- ESP32-C6 - Zigbee, Wifi, BLE etc
- LiPo charger with Power Path
- USB-C sink IC
- LED lights

Contents

1 Background **1**

2 Features **1**

3 This document **3**

4 Hardware design **4**

4.1 Desired features 4

4.2 Optional Subsystems 4

4.3 Power requirements 5

4.4 Battery 5

4.5 Charger Circuit 5

Important features 6

Typical application 6

4.6 USB-C Sink Controller 7

4.7 Fuel Gauge 7

4.8 3V3 Buck-Boost Regulator 7

4.9 5V Boost Regulator 8

4.10 LED 8

4.11 Speaker amplifier 8

4.12 MCU 8

Flash 8

Antenna 8

4.13 Protection circuits 8

ESD 8

Reverse polarity 8

Over current 8

4.14 Layout considerations 8

Board outline 8

Mounting features 8

Keep outs 8

PCB Antenna 8

Connectors 8

Switches 8

LEDs 8

Test points 8

Jumpers and options 8

Overlay information 8

Requirements **9**

References **9**

3 This document

This document serves several purposes.

- Description document when the design is done
- Working out the design
- Pointing out important design decisions
- Pointing out non-important design decisions
- Recognizing requirements

Design problems and decisions are written in a rounded rectangle.

How should I describe the design problems to the reader?

Decision: By example!

And recognized requirements are written in a sharp cornered rectangle.

Requirement: The Design Description shall explain the usage of requirements in the document.

These are summarized in the end of the document with the intent of being an input for external requirement management.

4 Hardware design

The hardware architecture can be seen in figure 2. The design can definitely be made more simple and cheap, but that is not the purpose of this project. However, several of the parts can be skipped if not desired.

4.1 Desired features

- Zigbee
- Wifi
- Battery powered long life
- USB-C powered / charged
- LED lights

4.2 Optional Subsystems

The following parts can be not-mounted or replaced with something else:

- USB-C Sink controller: Can be replaced by resistors.
- Fuel Gauge: Can be removed and the battery power can be bridged directly to the charger
- LiPo Charger + LiPo battery: Can be removed. System power directly bridged from VBUS.
- Boost regulator + LED Matrix: Can be skipped
- Miniature speaker: Can be skipped
- Flash: Can be avoided if using ESP32-C6FH4 or ESP32-C6FH8 instead

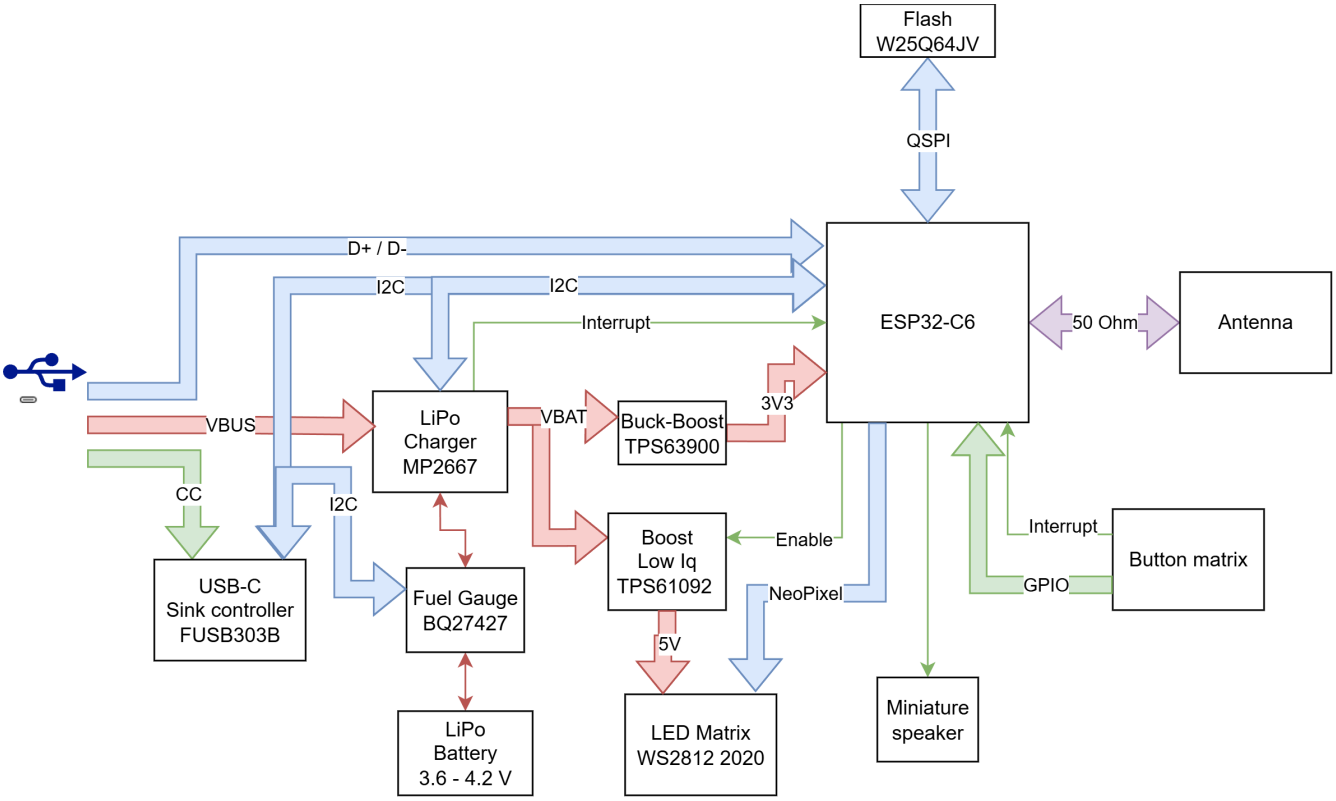

Figure 2: The hardware architecture of the BBB

4.3 Power requirements

Before any parts of the circuit can be properly designed, we need to determine the power and current requirements throughout the system.

The maximum peak current consumption of the ESP32-C6 is during WiFi transmission, which can be up to 354 mA at 3.3 V which is about 1.2 W [1, p. 66]. The average power consumption will be much lower than this, but we need to design the power system to be able to handle this peak.

Each WS2812 2020 LED consumes about $3 \times 12\,\text{mA} \approx 40\,\text{mA}$ at full brightness. Which for the full matrix of 9 LEDs would be about 360 mA, which at 5 V would be 1.8 W [2].

A speaker such as https://www.electrokit.com/en/miniatyrhogtalare-8ohm-1w-11x15mm driven with a MAX98357A class D amplifier can consume up to 1 W at 5 V, which is about 200 mA. It is possible to run it directly from V_{SYS} from the battery but it cannot output the full power. And since the 5 V boost regulator will be able to handle 1.5 A when fed with 3.6 V from the battery I decide to put it on the 5 V rail.

Subsystem	Voltage	Peak Current	Peak Power
ESP32-C6 (WiFi TX)	3.3 V	354 mA	1.2 W
LED Matrix (9x WS2812)	5 V	360 mA	1.8 W
Speaker (MAX98357A)	5 V	200 mA	1.0 W
Total			4.0 W

Table 1: Peak current and power consumption summary

A 500 mAh battery might fit into the enclosure, and with an allowed discharge current of 2 C it will only be able to provide max 3.6 W. So not all things will be able to run at full power at the same time, but that is not a requirement for this project.

Property	Value
Recommended Charging Current	80 mA
Maximum Charging Current	400 mA
Maximum Discharge Current	800 mA

Table 2: Battery specifications

4.4 Battery

The thickness of the current compartment left for a battery is at most 5 mm. The area depends on wether the PCB will be fastened by screws or not. If screws are used, then only a maximum of 35 mm × 35 mm is available for a battery.

What battery to use?

Decision: Go with the 400 mAh battery from electrokit for now: https://www.electrokit.com/batteri-lipo-3.7v-400mah

I should probably redesign the enclosure to allow for a bigger battery. It might be difficult to fit this with connectors and all.

4.5 Charger Circuit

BQ25601

Other candidates were MP2667, which has better quiescent current but no OTG and BQ25895 but it has D+/D- pins which I require for other purposes.

Requirement: The battery charger shall be optional

Should I make use of the shipping mode for the battery?

PENDING

Important features

As soon as the input voltage or battery voltage is high enough, the device will power up. At power up, the Input Current Limit is updated to reflect the `PSEL` pin (500 mA or 2.4 A). When this is done, the system output is soft-started and the switch converter for the battery charging is enabled.

If nothing is done, the device will automatically enter Default Mode which means it will autonomously act as a battery charger and charge the battery. To exit this mode, the host must write a 1 to the `WD_RST` but. Then the device enters Host Mode until the watchdog timer times out and `WATCHDOG_FAULT` is set and the device returns to Default Mode.

The default fast charging current `ICHG` is 2040 mA which is way too much for the chosen battery. Setting the Input Current Limit `IINDPM` using the pin `PSEL` high limits this to 500 mA. This might still be too much since the proposed battery allows a maximum charging current of 400 mA and the step-down converter will allow a higher charging current than input current.

Will the charger have to be disabled somehow at startup, and later enabled by the host, to prevent over current to the battery? Can be handled via the $\bar{CE}$ pin.

Decision: Yes, the current is way too large for this battery, the $\bar{CE}$ pin must be pulled up to prevent automatic charging.

Will some sort of startup delay or under-voltage-lock-out be needed for the subsequent circuits so that the soft-start can work properly?

PENDING

The device can operate in boost-mode to convert the battery voltage to 5 V and max 1.2 A for OTG use. This is controlled via I2C.

Requirement: There shall be a green LED controlled by the Power Good signal

Requirement: There shall be a red LED controlled by the signal

Typical application

The typical application is shown in 3.

There are three explained design procedures for determining the Inductor, the input Capacitor and the output Capacitor respectively.

$I_{SAT} \geq I_{CHG} + \frac{1}{2} I_{RIPPLE}$

$D = \frac{V_{BAT}}{V_{VBUS}}$

$$I_{RIPPLE} = \frac{V_{IN} \times D \times (1-D)}{f_s \times L} \iff L = \frac{V_{IN} \times D \times (1-D)}{f_S \times I_{RIPPLE}} \tag{1}$$

The inductors saturation current must be larger than the maximum charge current plus half the ripple current. The larger the inductance, the lower the ripple current. All of the parameters except the inductance and ripple current is known. According to you neighbouring LLM the ripple current should be 25 to 30 % of the maximum load current, so about 100 mA. Lets see where that lands us.

$$D = 3.2\,\mathrm{V}/5\,\mathrm{V} = 0.64 \tag{2}$$

$$L = \frac{5\,\mathrm{V} \times 0.64 \times (1-0.64)}{1.5\,\mathrm{MHz} \times 0.1\,\mathrm{A}} = \frac{1.152\,\mathrm{V}}{0.15\,\mathrm{MHz\,A}} = 7.68\,\mu\mathrm{H} \approx 6.8\,\mu\mathrm{H} \tag{3}$$

The saturation current must be greater than 400 mA + 50 mA = 450 mA. The self resonance should be greater than $10 \times f_S$ the switching frequency, so more than 15 MHz. For example the WIP322512A-6R8MLDG from INPAQ Technology Co., Ltd that comes in a standard 1210 package and has many second source alternatives.

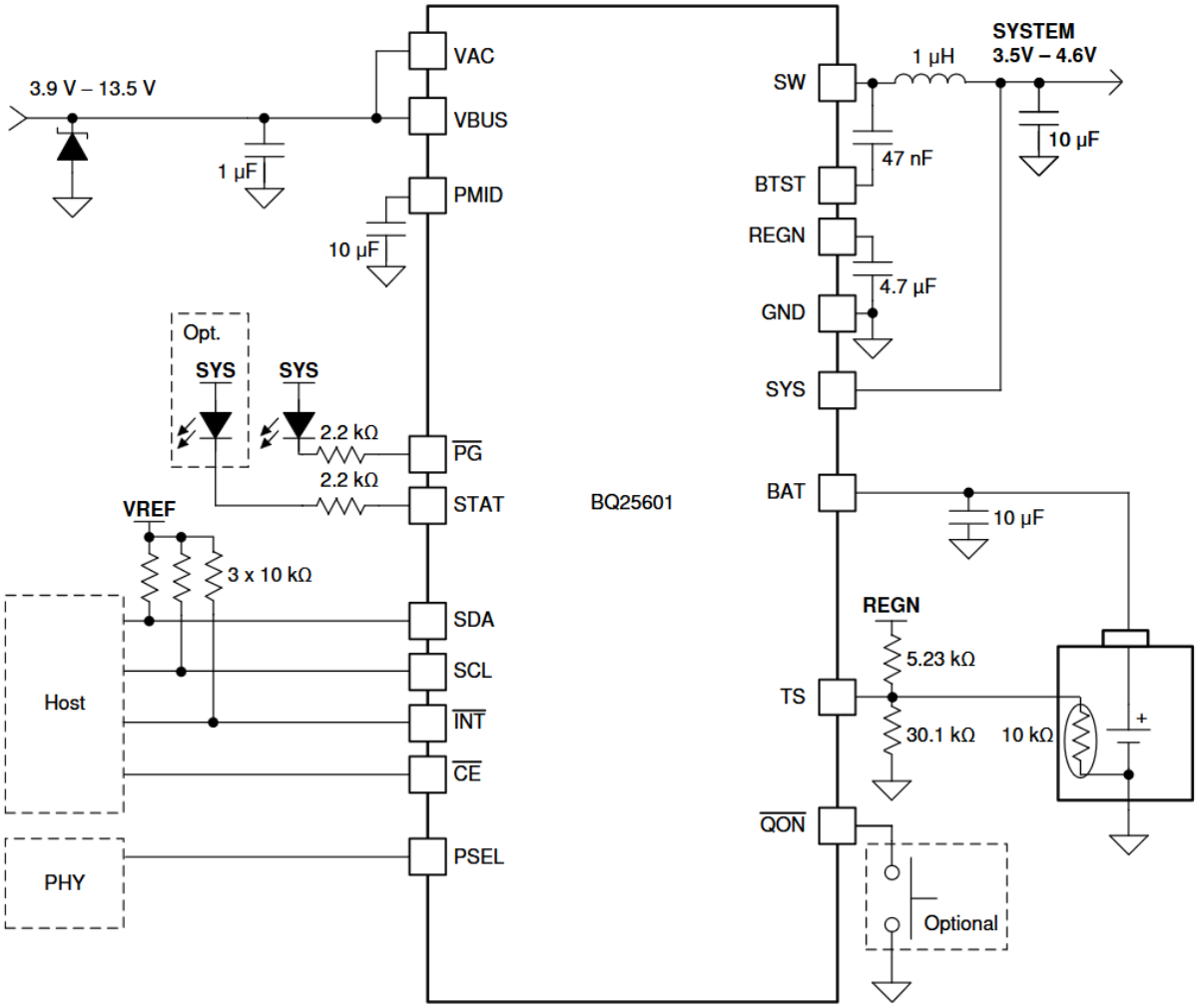

Figure 10-1. Power Path Management Application

Figure 3: BQ25601 typical application, section 10.2 in the datasheet. [3]

The input capacitor should be able take care of the ripple current. Suggestions make me target two or three 10 µF capacitors in 0805 package. $I_{CIN} = I_{CHG} \times \sqrt{D \times (1-D)}$

$I_{COUT} = \frac{I_{RIPPLE}}{2\times\sqrt{3}} \approx 0.29 \times I_{RIPPLE}$

$\Delta V_O = \frac{V_{OUT}}{8LCfs^2}\left(1 - \frac{V_{OUT}}{V_{IN}}\right)$

4.6 USB-C Sink Controller

FUSB303B

4.7 Fuel Gauge

BQ27441-G1

Another option might have been BQ27427, but it is bga.

4.8 3V3 Buck-Boost Regulator

TPS63900

4.9 5V Boost Regulator

TPS61092

4.10 LED

WS2812

4.11 Speaker amplifier

MAX98357A

4.12 MCU

ESP32-C6

Flash

W25Q64JV

The QSPI pin mapping to the ESP32 is described in the datasheet [1, p. 32].

Datasheet [4]

Antenna

PCB Antenna, see section 4.14.

4.13 Protection circuits

ESD

Requirement: The USB-C port shall have ESD protection

Requirement: The battery port shall have ESD protection unless it affects leakage too much.

Reverse polarity

Requirement: Ensure keyed connector for battery.

Over current

Requirement: There shall be some sort of fuse for the battery.

4.14 Layout considerations

In the following sections most layout related decisions will be clarified.

Board outline

Mounting features

Keep outs

PCB Antenna

Inverted-F antenna, perhaps according to https://www.ti.com/lit/an/swru120d/swru120d.pdf?ts=1775731789186.

Connectors

Switches

LEDs

Test points

Jumpers and options

- Option of having no charger circuitry
- Option of having no USB-C Sink controller
- Option of having no fuel gauge
- Optional jumper inline with power for measuring quiescent currents

Overlay information

Requirements

Ensure keyed connector for battery., 8

The battery charger shall be optional, 5
The battery port shall have ESD protection unless it affects leakage too much., 8
The USB-C port shall have ESD protection, 8
There shall be a green LED controlled by the Power Good signal, 6
There shall be a red LED controlled by the signal, 6
There shall be some sort of fuse for the battery., 8

References

[1] *ESP32-C6 Datasheet*. Version v1.4. 2025-11-20. URL: https://documentation.espressif.com/esp32-c6_datasheet_en.pdf.

[2] World Semi. *WS2812 Product Page*. URL: http://www.world-semi.com/web/index.php?topclassid=16&classid=302&id=223.

[3] *BQ25601 Datasheet*. Version A. 2023-03-01. URL: https://www.ti.com/lit/ds/symlink/bq25601.pdf.

[4] *W25Q64JV Datasheet*. Version M. 2024-12-24. URL: https://www.winbond.com/hq/product/code-storage-flash-memory/serial-nor-flash/?__locale=en&partNo=W25Q64JV.